19.Camshaft

A: REMOVAL

NOTE:
Perform the work with the engine installed to body when replacing a single part. Refer to “Valve Clearance” for preparation. <Ref. to ME(H4SO)-29, Valve Clearance.>

1) Remove the V-belts. <Ref. to ME(H4SO)-39, REMOVAL, V-belt.>
2) Remove the crank pulley. <Ref. to ME(H4SO)-41, REMOVAL, Crank Pulley.>
3) Remove the timing belt cover. <Ref. to ME(H4SO)-42, REMOVAL, Timing Belt Cover.>
4) Remove the timing belt. <Ref. to ME(H4SO)-43, REMOVAL, Timing Belt.>
5) Remove the cam sprocket. <Ref. to ME(H4SO)-48, REMOVAL, Cam Sprocket.>
6) Remove the timing belt cover No. 2 (LH).
7) Remove the timing belt cover No. 2 (RH).

NOTE:
Do not damage or lose the seal rubber when removing the timing belt covers.

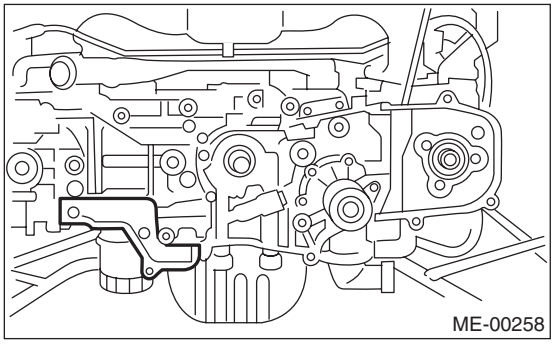

8) Remove the tensioner bracket.

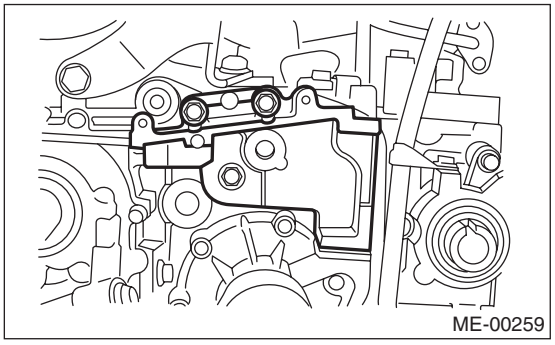

9) Remove the camshaft position sensor support. (LH side only)
10) Remove the oil level gauge guide. (LH side only)
11) Remove the valve rocker assembly. <Ref. to ME(H4SO)-51, REMOVAL, Valve Rocker Assembly.>
12) Remove the camshaft cap.
(1) Remove the bolts (a) and (b) in alphabetical sequence.

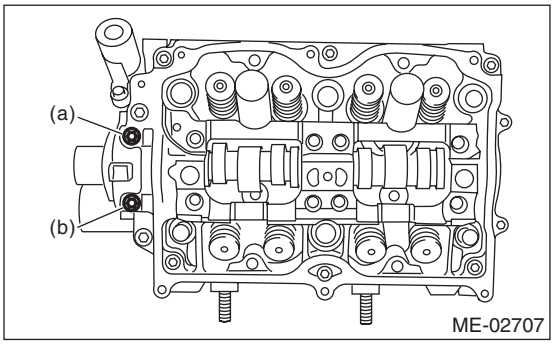

(2) Equally loosen the bolts (c) through (j) all the way in alphabetical sequence.

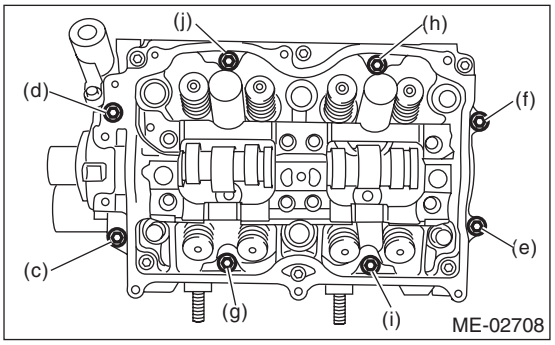

(3) Remove the bolts (k) through (p) in alphabetical sequence using ST.

ST 499497000 TORX PLUS®

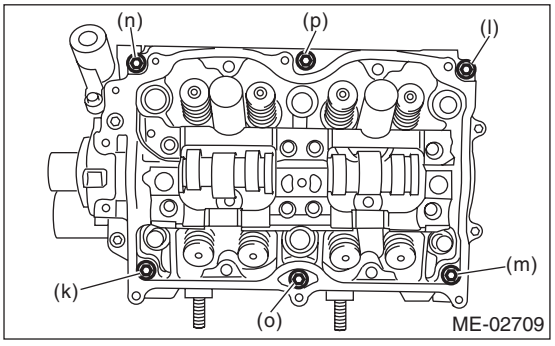

(4) Remove the camshaft cap.
13) Remove the camshaft.
14) Remove the oil seal.
15) Remove the plug from rear side of camshaft.

CAUTION:
- **Do not remove the oil seal unless necessary.**
- **Do not scratch the journal surface when removing the oil seal.**

B: INSTALLATION

1) Apply a thin coat of engine oil to camshaft journals, and install the camshaft.
2) Install the camshaft cap.
   (1) Apply liquid gasket to the mating surfaces of camshaft cap.

Liquid gasket:
THREE BOND 1280B (Part No. K0877YA018)

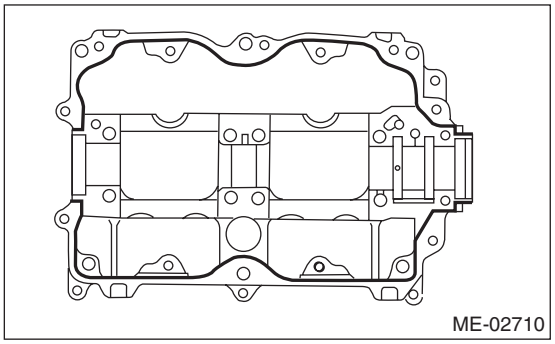

NOTE:
- Apply a coat of liquid gasket of 3 mm (0.12 in) in diameter (A) along the edge (B) of camshaft cap (C) mating surface.
- Install within 5 min. after applying liquid gasket.

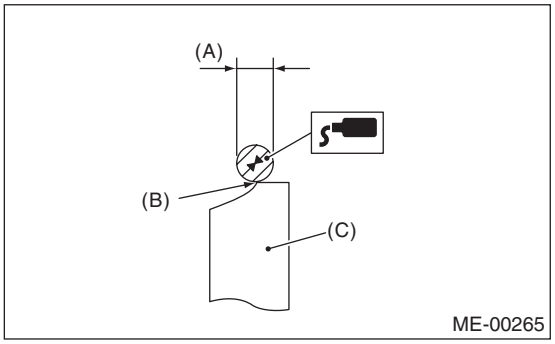

(2) Temporarily tighten the bolts (a) through (d) in alphabetical sequence.

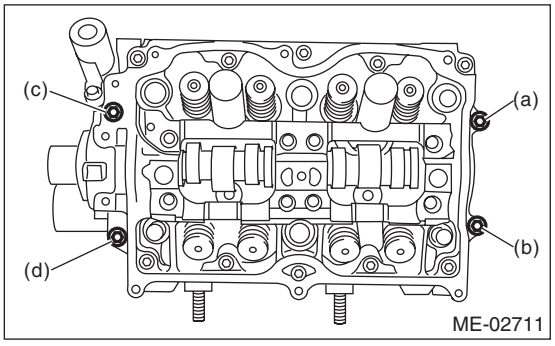

(3) Install the valve rocker assembly. <Ref. to ME(H4SO)-51, INSTALLATION, Valve Rocker Assembly.>
(4) Tighten the TORX® bolts (e) through (j) in alphabetical sequence using the ST.

ST 499497000 TORX PLUS®

Tightening torque:
18 N·m (1.8 kgf-m, 13.3 ft-lb)

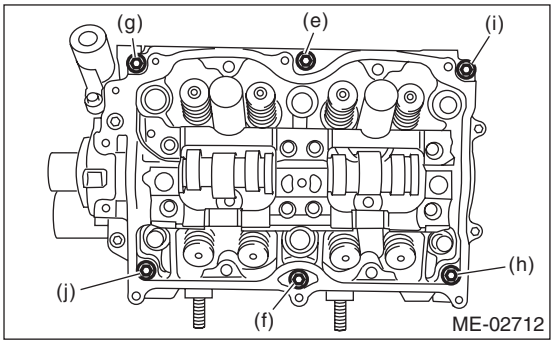

(5) Tighten the bolts (k) through (r) in alphabetical sequence.

Tightening torque:
9.75 N·m (1.0 kgf-m, 7.2 ft-lb)

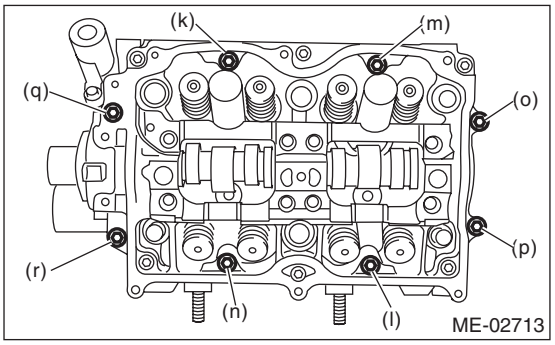

(6) Tighten the bolts (s) and (t) in alphabetical sequence.

NOTE:
- Use a new seal washer.
- Install and tighten the seal washer.

Tightening torque:
9.75 N·m (1.0 kgf-m, 7.2 ft-lb)

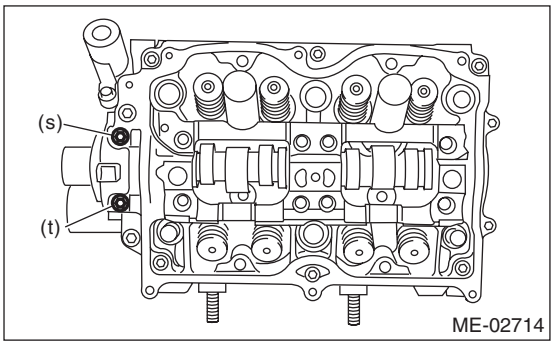

3) Apply a coat of engine oil to oil seal periphery and oil seal lips and install the oil seal (A) on camshaft using ST1 and ST2.

NOTE:
Use a new oil seal.
ST1 499597000 OIL SEAL GUIDE
ST2 499587500 OIL SEAL INSTALLER

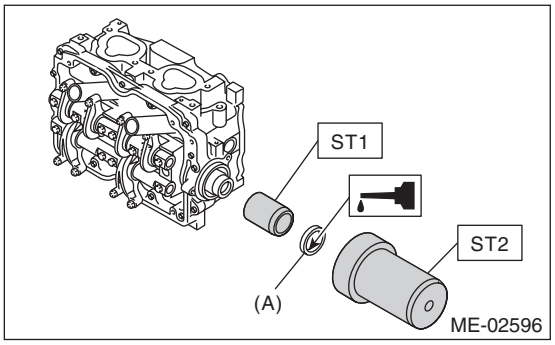

4) Install the plug (A) using ST.
ST 499587700 CAMSHAFT OIL SEAL INSTALLER

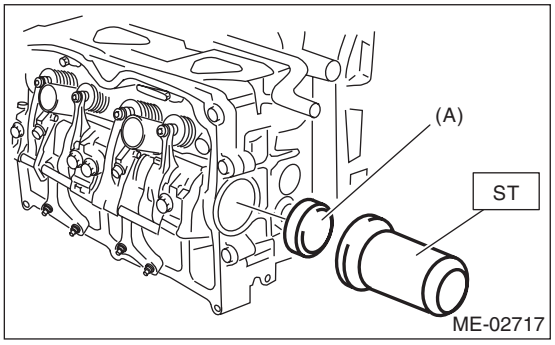

5) Adjust the valve clearance. <Ref. to ME(H4SO)-30, ADJUSTMENT, Valve Clearance.>
6) Install the rocker cover and rocker cover gasket, and then connect PCV hose.

NOTE:
- Use a new rocker cover gasket.
- Tighten the bolts in two stages in alphabetical sequence as shown in figure.

Tightening torque:
1st
6.4 N·m (0.65 kgf-m, 4.7 ft-lb)
2nd (only (a) and (b) are tightened)
6.4 N·m (0.65 kgf-m, 4.7 ft-lb)

- RH side

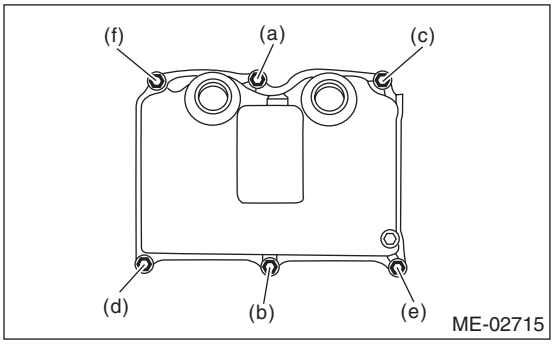

- LH side

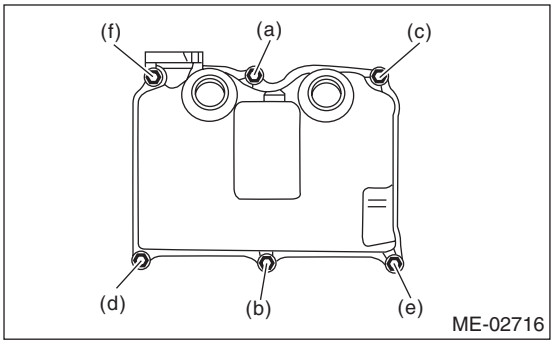

7) Install the oil level gauge guide. (LH side)
8) Install the camshaft position sensor support. (LH side)
9) Install the tensioner bracket.

Tightening torque:
24.5 N·m (2.5 kgf-m, 18.1 ft-lb)

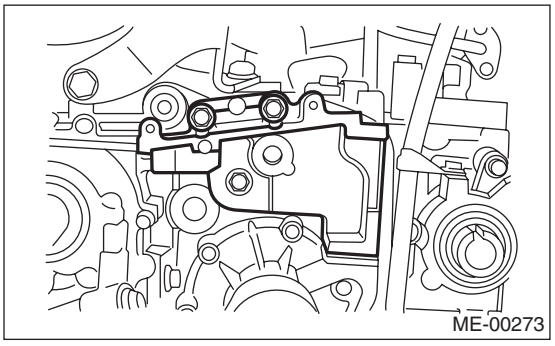

10) Install the timing belt cover No. 2 (RH).

Tightening torque:
5 N·m (0.5 kgf-m, 3.6 ft-lb)

11) Install the timing belt cover No. 2 (LH).

Tightening torque:
5 N·m (0.5 kgf-m, 3.6 ft-lb)

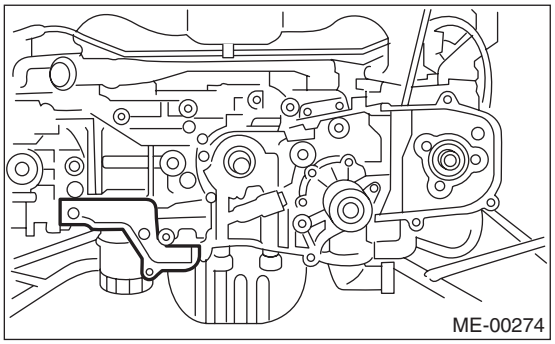

12) Install the cam sprocket. <Ref. to ME(H4SO)-48, INSTALLATION, Cam Sprocket.>
13) Install the timing belt. <Ref. to ME(H4SO)-44, INSTALLATION, Timing Belt.>
14) Install the timing belt cover.
<Ref. to ME(H4SO)-42, INSTALLATION, Timing Belt Cover.>
15) Install the crank pulley. <Ref. to ME(H4SO)-41, INSTALLATION, Crank Pulley.>
16) Install the V-belts. <Ref. to ME(H4SO)-39, INSTALLATION, V-belt.>

C: INSPECTION

1) Measure the bend, and repair or replace if necessary.

Service limit:
0.025 mm (0.00098 in)

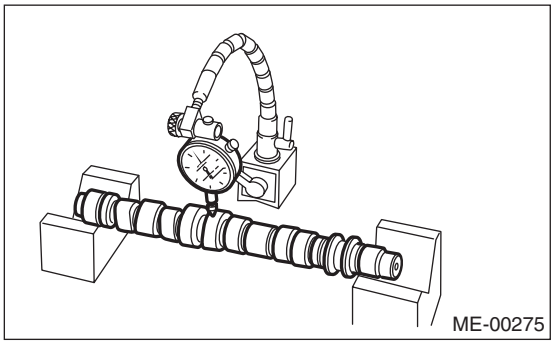

2) Check the journal for damage and wear. Replace if faulty.
3) Measure the outer diameter of camshaft journal and inner diameter of cylinder head journal, and confirm the difference (oil clearance) between the two values. If the oil clearance is not within the standard, replace the camshaft or cylinder head as necessary.

		Unit: mm (in)
Oil clearance	Standard	0.055 — 0.090 (0.0022 — 0.0035)
	Limit	0.10 (0.0039)
Camshaft journal O.D.		31.928 — 31.945 (1.2570 — 1.2577)
Journal hole I.D.		32.000 — 32.018 (1.2598 — 1.2605)

4) Check the cam face condition, and remove the minor faults by grinding with oil stone. Measure the cam height H. If it is not within the standard, replace the part.

Cam height H:

Part			Unit: mm (in)
Intake	Constant	Standard	40.075 — 40.175 (1.5778 — 1.5817)
		Limit	39.975 (1.5738)
	Low speed	Standard	35.182 — 35.282 (1.3851 — 1.3891)
		Limit	35.082 (1.3812)
	High speed	Standard	40.315 — 40.415 (1.5872 — 1.5911)
		Limit	40.215 (1.5833)
Exhaust		Standard	40.149 — 40.249 (1.5807 — 1.5846)
		Limit	40.049 (1.5767)

Cam base circle diameter A:
Intake: 34.00 mm (1.3386 in)
Exhaust: 34.00 mm (1.3386 in)

Base circle step of adjacent intake cams (low speed and high speed):
0.03 mm (0.001 in) or less

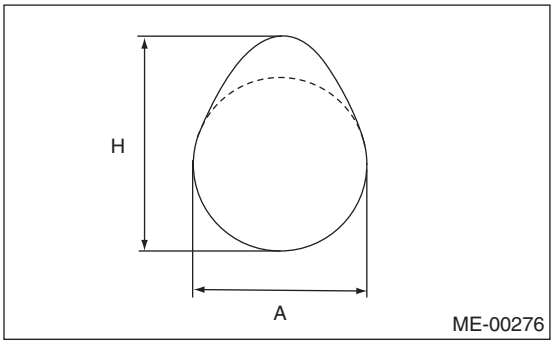

5) Measure the thrust clearance of camshaft with setting the dial gauge at end of camshaft. If the thrust clearance is not within the limit, replace the camshaft caps and cylinder head as a set. If necessary, replace the camshaft.

Standard:
0.030 — 0.090 mm (0.0012 — 0.0035 in)

Service limit:
0.10 mm (0.0039 in)